Student ID#: _____ Student Name: _____

IS222: Database Management Systems

Faculty of Science, Technology and Environment
School of Computing, Information and Mathematical Sciences

Final Examination
Semester I 2018

Face-To-Face and Online Mode

Duration of Exam: 3 hours + 10 minutes

Reading Time: 10 minutes

Writing Time: 180 minutes

INSTRUCTIONS

1. This examination has four sections:
   - Section A: Multiple Choice (20 marks)
   - Section B: Modelling & Normalization (44 marks)
   - Section C: SQL (24 marks)
   - Section D: Transaction (12 marks)
2. **All** questions are compulsory.
3. Write **ALL** answers in the space provided within this paper.
4. This exam is **marked out of 100** and is worth **40%** of your **overall course marks**.
5. To **pass** this paper you require **at least 40% for this exam**, which is equivalent to **40 marks out of 100.**
6. This is a closed book exam.
7. This paper has 19 pages including this page.

Section A: Multiple Choice 20 Marks

Instructions:
Identify and circle the choice that best completes the statement or answers the question in the provided answer sheet on page 8. There is only **one** possible answer.

1) Customer email address is an example of a _____ attribute whilst Customer Address is an example of a _____ attribute.

   a. Multivalued, composite
   b. Composite, multivalued
   c. Simple, single valued
   d. Single valued, simple

2) An entity cluster is formed by combining multiple interrelated entities into ____.

   a. a single abstract entity object
   b. a single entity object
   c. multiple abstract entity object
   d. multiple entity objects

3) In the INVOICE_LINE table, the PROD_ID is listed for each product in the INVOICE_LINE however; the PROD_ID is not used to uniquely identify an invoice line. In this _____ relationship between INVOICE_LINE and PRODUCT, INVOICE_LINE can be regarded as a _____ entity

   a. Strong identifying, weak
   b. Weak non identifying, strong
   c. Strong non identifying, weak
   d. Weak identifying, strong

4) A table that displays data redundancies yields ____.
   a. Insert anomalies
   b. Delete anomalies
   c. Update anomalies
   d. All of the above

5) Surrogate primary keys are especially helpful when there is no ____ key.

   a. primary
   b. foreign
   c. Natural
   d. None of the above

6) In the CUSTOMER table with CUS_ID as the primary key, _____ dependencies will not be present when the table is in 1NF.

   a. partial
   b. transitive
   c. functional
   d. All of the above

7) The step, ____, occurs first in the process of building an ERD.

   a. Develop the initial ERD.
   b. Create a detailed narrative of the organization's description of operations.
   c. Identify the attributes and primary keys that adequately describe the entities.
   d. Identify the business rules based on the description of operations.

8) The conflicts between design efficiency, information requirements, and processing speed are often resolved through ____.

   a. conversion from 1NF to 2NF
   b. conversion from 2NF to 3NF
   c. compromises that include denormalization
   d. conversion from 3NF to 4NF

9) A ____ is a textual representation of the database tables where each table is listed by its name followed by the list of its attributes in parentheses.
   a. relational dictionary
   b. logical schema
   c. relational schema
   d. data dictionary

10) For two tables to be union-compatible:

a. **The number of attributes must be the same, and data types are alike**.
b. The names of the relation attributes can be different, but the data types must be identical.
c. The names of the relation attributes must be the same, but the data types can be different.
d. The number of attributes must be the same but their data types can be different.

11) If an employee within an EMPLOYEE entity has a relationship with itself, that relationship is known as a _____ relationship.

a. self
b. self-referring
c. looping
d. recursive

12) Attribute A _____ attribute B if all of the rows in the table that agree in value for attribute A also agree in value for attribute B

a. **determines**
b. controls
c. derives from
d. owns

13) CUSTOMER table contains 12 rows, while the CUSTOMER_2 table contains 8 rows. Customers Ronal and Sally are included in the CUSTOMER table as well as in the CUSTOMER_2 table. How many records are returned when using the UNION operator?

a. 8
b. 12
c. 20
d. **18**

14) When inserting a new record in a table, you must specify the keyword(s) ____ for any fields in which you do not have a value.

a. BLANK
b. NULL
c. VOID
d. NO VALUE

15) One of the three most common data integrity and consistency problem is ___.

a. lost updates
b. disk failures
c. user errors
d. deadlocks

16) Which of these commands will delete a table called XXX if you have appropriate authority?

a. DROP XXX
b. DROP XXX WHERE confirm = "YES"
c. **DROP TABLE XXX**
d. DELETE TABLE XXX

17) You must be logged in with the ____ account or have sufficient privileges to take away privileges from another user account.

a. base
b. root
c. source
d. global

18) What is a rule that applies to the two-phase locking protocol.

a. no unlock operation can precede a lock operation in a different transaction.
b. no data is affected until all locks are released.
c. no data is affected until the transaction is in its locked position.
d. **two transaction cannot have conflicting lock.**

19) A ____ lock prevents the use of any tables in the database from one transaction while another transaction is being processed.

- **a. database-level**
- b. table-level
- c. page-level
- d. row-level

20) All transactions must display ____.

- a. atomicity,serializability, and durability
- b. durability and isolation
- c. serializability, durability, and isolation
- d. **atomicity, durability, serializability, and isolation**

Section A: Answer Sheet

Circle the correct answer.

Section B: Modeling & Normalization 45 Marks

Question 1: Entity Relationship Modelling (25 Marks)

Use the following case study to answer parts (a) to (d) of this question.

XYZ hospital is a multi-specialty hospital that includes a number of departments, rooms, doctors, nurses, compounders, and other staff working in the hospital. Patients having different kinds of ailments come to the hospital and get check-up done from the concerned doctors. If required they are admitted in the hospital and discharged after treatment.

The aim of this case study is to design and develop a database for the hospital to maintain the records of various departments, rooms, and doctors in the hospital. It also maintains records of the regular patients, patients admitted in the hospital, the check-up of patients done by the doctors, the patients that have been operated, and patients discharged from the hospital.

In hospital, there are many departments like Orthopaedic, Pathology, Emergency, Dental, Gynaecology, Anaesthetics, I.C.U., Blood Bank, Operation Theatre, Laboratory, M.R.I., Neurology, Cardiology, Cancer Department, Corpse, etc. For each department, name, location and facilities available should be stored. When patient arrives, a patient number is generated. Other details like name, age, sex, address, city, phone number, entry date, and name of the doctor referred to, diagnosis, and department name are also stored. After storing the necessary details patient is sent to the doctor for check-up. There is an OPD where patients come and get a card (that is, entry card of the patient) for check up from the concerned doctor. After making entry in the card, they go to the concerned doctor's room and the doctor checks up their ailments. A doctor can check-up many patients. A patient can go to any doctor. According to the ailments, the doctor either prescribes medicine or admits the patient in the concerned department. The patient may choose either private or general room according to his/her need. But before getting admission in the hospital, the patient has to fulfil certain formalities of the hospital like room charges, etc. After the treatment is completed, the doctor discharges the patient. Before discharging from the hospital, the patient again has to complete certain formalities of the hospital like balance charges, test charges, operation charges (if any), blood charges, doctors' charges, etc. When patient is admitted, his/her related details are stored in the database. Information stored includes patient number, advance payment, mode of payment, room number, department, date of admission, initial condition, diagnosis, treatment, number of the doctor under whom treatment is done, attendant name, etc. If patient is operated in the hospital, his/her details are stored in the database. Information stored includes patient number, date of admission, date of operation, number of the doctor who conducted the operation, number of the Operation Theatre in which operation was

carried out, type of operation, patient's condition before and after operation, treatment advice, etc.

There are two types of the doctors in the hospital, namely, regular doctors and call on doctors. Regular doctors are those doctors who come to the hospital daily. Calls on doctors are those doctors who are called by the hospital if the concerned doctor is not available. Each doctor is given an identity number starting with DR (regular) or DC (on-call) prefixes only. For each doctor, doctor id, name, qualification, address, phone number, address is stored. A regular doctor should have doctor id, salary, and date of joining stored. An on-call doctor will have doctor id, fees per call and payment due stored.

a) List any two techniques the database designer can apply to identify the business rules. **(2 marks)**

Ans:

Fact finding techniques: company documents, interviews, questionnaires, observation, exiting products.

MG:

1mark for each technique. Students to list any two.

b) List all possible business rules that emerge from the given scenario. **(5 Marks)**

ANS:

1. A department can have zero or many doctors. A doctor can work in one department.
2. A doctor can check zero or many patients. A patient can be checked by zero or many doctors.
3. A doctor can operate zero or many patients. A patient can be operated by zero or many doctors.
4. A doctor can be a regular doctor. A regular doctor is a doctor of the hospital.
5. A doctor can be an on-call doctor. An on-call doctor is a doctor of the hospital.
6. A patient can be admitted. An admitted patient is a patient of the hospital.

7. A patient can be regular. A regular patient is a patient of the hospital

c) Use Crow's Foot notation to draw an Entity Relationship Diagram (or ERD) for the given scenario. Be sure to specify the entities, attributes, primary/foreign keys, relationship strengths/cardinalities etc. **(15 Marks)**

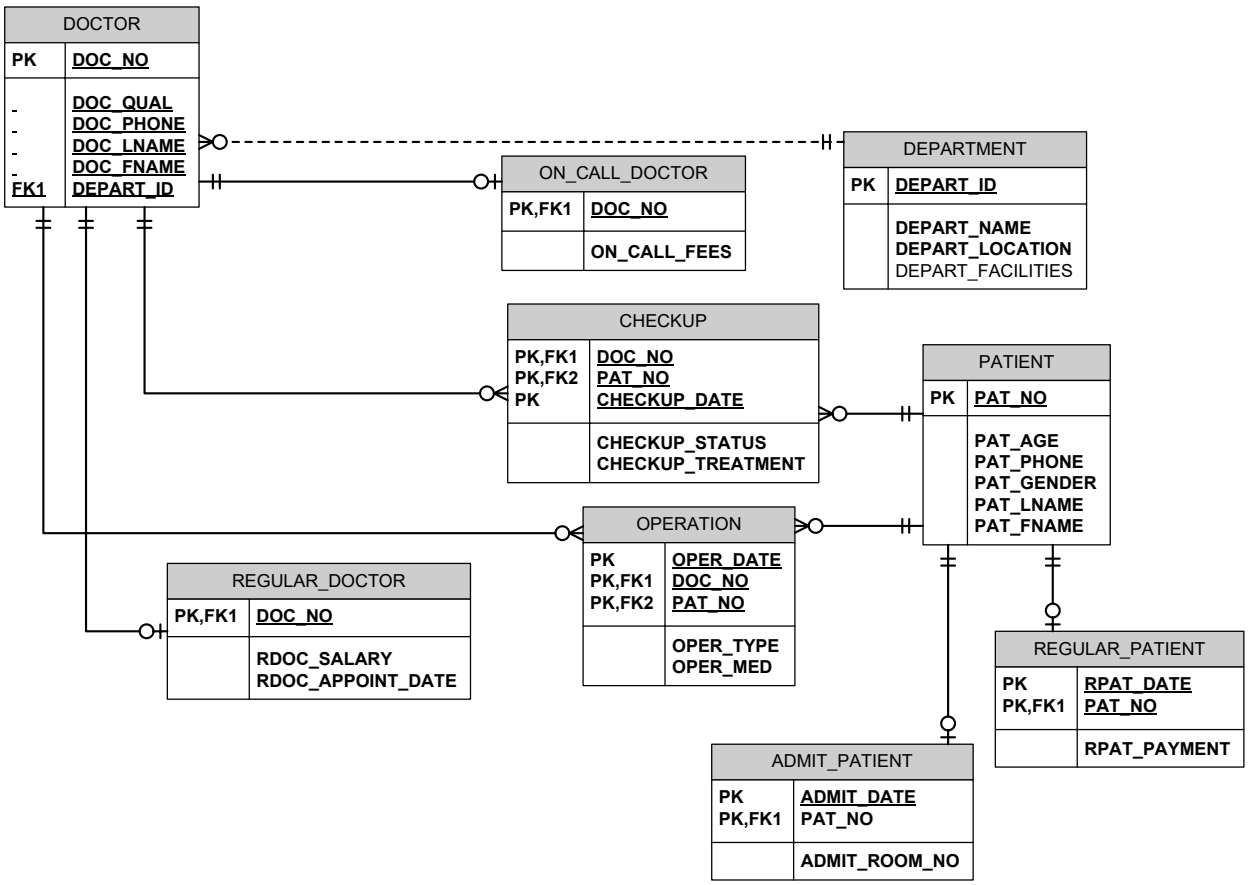

d) After creating the ERD, briefly discuss the following:

i. How do the business rules help you when creating the ERD? **(1 mark)**

Ans:

It helps identify the entities and the relationship between the entities.

ii. Choose any one attribute that should be indexed apart from the primary and foreign keys, and briefly justify your choice. **(2 marks)**

Ans:

Many answers are possible, therefore, marker discretion is required. An example could be: assign_date: this attribute could be used frequently to identify employees working on a particular project on certain dates.

Question 2: Normalization (20 Marks)

Use the following description to answer parts (a) to (d) of this question.

The Gill Art Gallery wishes to maintain data on their customers, artists and paintings. They may have several paintings by each artist in the gallery at one time. Paintings may be bought and sold several times. In other words, the gallery may sell a painting, then buy it back at a later date and sell it to another customer. Below is a gallery customer history form.

Gallery Customer History Form

Customer Name

Jackson, Elizabeth Phone (206) 284-6783
123 – 4th Avenue
Fonthill, ON
L3J 4S4

Purchases Made

Artist	Art code and title	Purchase Date	Sales Price
03 - Carol Channing	A01-Laugh with Teeth	09/17/2000	7000.00
15 - Dennis Frings	A02-South toward Emerald Sea	05/11/2000	1800.00
03 - Carol Channing	A03-At the Movies	02/14/2002	5550.00
15 - Dennis Frings	A02-South toward Emerald Sea	07/15/2003	2200.00

a) Explain normalization and its different forms. (2 marks)

Normalization is a process for evaluating and correcting table structures to minimize data redundancies, thereby reducing the likelihood of data anomalies. The normalization

process involves assigning attributes to tables based on the concept of determination. Normalization works through a series of stages called normal forms. The first three stages are described as first normal form (1NF), second normal form (2NF), and third normal form (3NF). From a structural point of view, 2NF is better than 1NF, and 3NF is better than 2NF. For most purposes in business database design, 3NF is as high as you need to go in the normalization process. However, properly designed 3NF structures also meet the requirements of fourth normal form (4NF).

b) Identify functional, partial, and transitive dependencies (if any) by drawing a dependency diagram. **(8 marks)**

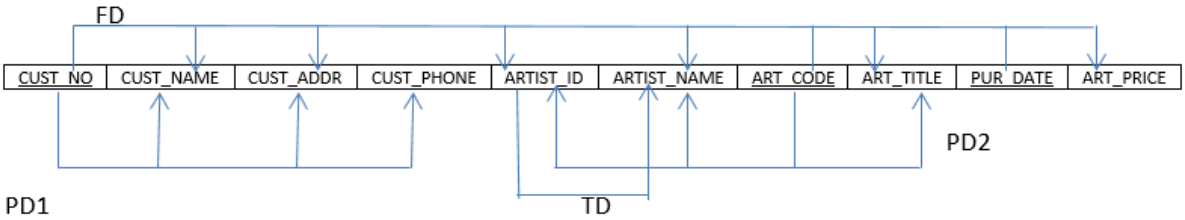

c) Using the initial dependency diagram from question 2. b), convert your table structure to second normal form (2NF), and draw the new dependency diagram. **(5 marks)**

customer [<u>custno</u>, cust_name, cust_addr, cust_phone]

cust_art [<u>custno</u>, <u>art_code</u>, <u>pur_date</u>, price]

art [<u>art_code</u>, art_title, artist_id, artist_name]

d) Using the dependency diagram from question 2. c), convert your table structure to third normal form (3NF), and draw the new dependency diagram. **(5 marks)**

customer [custno, cust_name, cust_street, cust_city, cust_prov, cust_pstlcd, cust_phone]

cust_art [custno, art_code, pur_date, price]

art [art_code, art_title, artist_id(FK)]

artist [artist_id, artist_fname, artist_lname]

Section C: Structured Query Language (SQL) 24 Marks

Use the following description and the ERD given below to answer parts (a) to (l) of this question.

MirageVideo is a start-up local rental company-providing DVD service in upscale neighbourhoods. MirageVideo operations is supported by the database depicted below. MirageVideo can own several copies (VIDEO) of each movie (MOVIE). A rental transaction (RENTAL) involves one or more videos being rented to a member (MEMBERSHIP). A video can be rented many times over its lifetime.

The management team needs some reports for their upcoming meeting. In the following questions, you will be required to write the relevant queries that will provide the required information for their report. Your queries should be written for a MySQL database. You are required to use the given attribute names in the following ERD diagram in your queries.

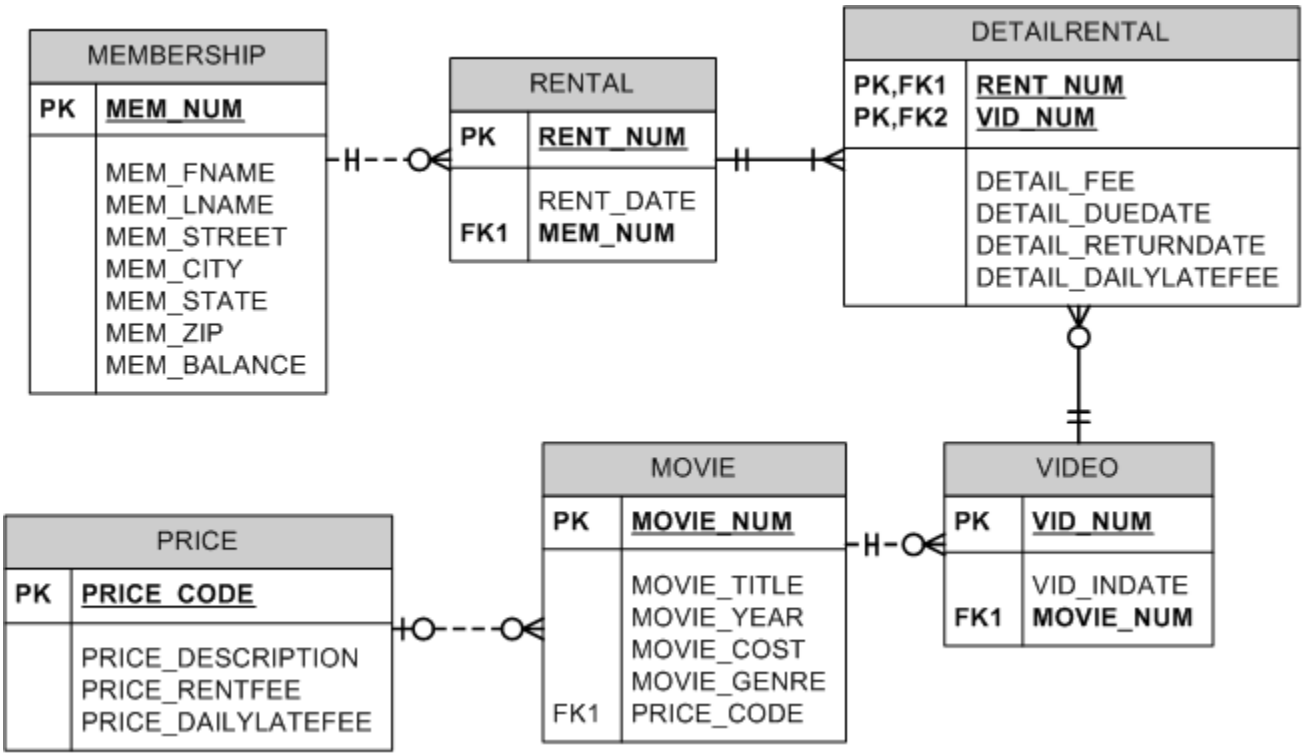

a) Write the necessary SQL command(s) that will display the name of the user who is currently using the system? **(1 mark)**

```
SELECT CURRENT_USER();
```

b) Write the necessary SQL command(s) to see all the tables in the database? **(1 mark)**

```
show tables;
```

c) The structure of the movies table is given in Figure 1 below. Write the necessary SQL Statement to create the MOVIE table **(4 Marks)**

Field	Type	Null	Key	Default	Extra
MOVIE_NUM	decimal(8,0)	NO	PRI	NULL	
MOVIE_TITLE	varchar(75)	NO		NULL	
MOVIE_YEAR	decimal(4,0)	YES		NULL	
MOVIE_COST	decimal(5,2)	YES		NULL	
MOVIE_GENRE	varchar(50)	YES		NULL	
PRICE_CODE	decimal(2,0)	YES		NULL	

Figure 1

```
DROP TABLE IF EXISTS MOVIE;

CREATE TABLE MOVIE (

MOVIE_NUM    int(11)  NOT NULL,

MOVIE_TITLE    VARCHAR(75) NOT NULL,

MOVIE_YEAR    int(4)  CHECK (MOVIE_YEAR > 1900),

MOVIE_COST    decimal(5,2),

MOVIE_GENRE VARCHAR(50),

PRICE_CODE     int(2),

CONSTRAINT MOVIE_PK_MOVIE_NUM PRIMARY KEY (MOVIE_NUM),

CONSTRAINT MOVIE_FK_PRICE_CODE FOREIGN KEY (PRICE_CODE) REFERENCES PRICE

);
```

d) Using SQL Statement(s), add the flowing two records to the MOVIE table. **(2 Marks)**

MOVIE					
Movie_Num	**Movie_Name**	**Movie_Year**	**Movie_Cost**	**Movie_Genre**	**Price_Code**
1234	The Cesar Family Christmas	2014	39.95	FAMILY	2
1235	Smokey Mountain Wildlife	2011	59.95	ACTION	1

```
NSERT INTO MOVIE VALUES
(1234, 'The Cesar Family Christmas', 2014, 39.95, 'FAMILY',   2),
(1235, 'Smokey Mountain Wildlife', 2011, 59.95, 'ACTION',   1);
```

e) Write the SQL command(s) to save the two recorded you have added. **(1 Mark)**

```
COMMIT;
```

f) List the movie number, name and the number of copies aliased as Copies of each movie that has more than five copies. **(5 Marks)**

```
SELECT m.Movie_Num, Movie_Title, count(VID_NUM) AS 'copies'

FROM MOVIE AS m, VIDEO AS v

 WHERE m. Movie_Num = v. Movie_Num

Group By m. Movie_Num, Movie_Title

HAVING COUNT(VID_NUM) > 5;


SELECT m.Movie_Num, Movie_Title, count(VID_NUM) AS 'Copies'

FROM MOVIE AS m, VIDEO AS v

 WHERE m. Movie_Num = v. Movie_Num

Group By m. Movie_Num, Movie_Title

HAVING Copies > 5;


SELECT m.Movie_Num, Movie_Title, count(VID_NUM) AS 'copies'

FROM MOVIE natural join VIDEO

 Group By  Movie_Num, Movie_Title

HAVING COUNT(VID_NUM) > 5;
```

g) List the members (full name) aliased as Name, and member balance sorted by member last name in ascending order. **(2 Marks)**

```
SELECT CONCAT_WS( ' ', Mem_LName, Mem_FName) AS Name, Mem_Balance

FROM MEMBERSHIP

ORDER BY Mem_LName;
```

h) List the movie name and movie year for all movies that have a price code. **(2 Marks)**

```
SELECT MOVIE_TITLE, MOVIE_YEAR

FROM MOVIE

WHERE PRICE_CODE IS NOT NULL;
```

i) Change the PRICE table to include an attribute named PRICE_RENTDAYS to store integers up to 2 digits. The attribute should not accept null values, and should have a default value of 4. **(2 Marks)**

```
ALTER TABLE PRICE

ADD PRICE_RENTDAYS NUMBER(2,0) DEFAULT 4 NOT NULL;
```

j) Write a stored procedure to select all Movie records from the movies table. The name of the stored procedure should be AllMovies **(2 marks)**

```
DELIMITER //

CREATE PROCEDURE AllMovies()

BEGIN

select * from movies;

END

//

DELIMITER ;
```

k) Briefly explain two reasons for using stored procedures. **(2 marks)**

- Implementing consistent data processing logic, that is, how data is processed by the RDBMS.
- Implementing data access control, that is, control the access to the tables.

Section D: Transaction Processing 12 Marks

Question 1

Explain the following statement: a transaction is a logical unit of work. **(1 Mark)**

A transaction is a logical unit **of work that must be entirely completed or aborted**; no intermediate states are accepted. In other words, a transaction, composed of several database requests, is treated by the DBMS as a unit of work in which all transaction steps must be fully completed if the transaction is to be accepted by the DBMS.

Question 2

Deadlock is a major issue in the context of databases. Using examples, briefly describe deadlock and how it could be addressed. **(3 Marks)**

A deadlock occurs when two transactions wait indefinitely for each other to unlock data. For example, a deadlock occurs when two transactions, T1 and T2, exist in the following mode: T1 = access data items X and Y T2 = access data items Y and X If T1 has not unlocked data item Y, T2 cannot begin; if T2 has not unlocked data itemX, T1 cannot continue. Consequently, T1 and T2 each wait for the other to unlock the required data item. Such a deadlock is also known as a deadly embrace.

The three basic techniques to control deadlocks are:

- Deadlock prevention.
- Deadlock detection.
- Deadlock avoidance.

Question 3

Use the following description to answer parts (a) to (b) of this question.

Suppose you are a manufacturer of product AB, which is composed of parts A and B. Each time a new product is created, it must be added to the product inventory, using the PROD_QOH in a table named PRODUCT. And each time the product AB is created, the parts inventory, using PART_QOH in a table named PART, must be reduced by one each of parts A and B. The sample database contents are shown in Figure 2.

Table name: PRODUCT **Table name: PART**

PROD_CODE	PROD_QOH
AB	2,563

PART_CODE	PART_QOH
A	895
B	129

Figure 2

a) How many database requests can you identify for an inventory update for both PRODUCT and PART? **(1 Mark)**

Depending on how the SQL statements are written, there are two correct answers: 3 or 2.

b) Write the complete transaction(s). **(4 Marks)**

3 SQL statements	2 SQL statements
BEGIN TRANSACTION UPDATE PRODUCT SET PROD_QOH = PROD_OQH + 1 WHERE PROD_CODE = 'AB' UPDATE PART SET PART_QOH = PART_OQH - 1 WHERE PART_CODE = 'A' UPDATE PART SET PART_QOH = PART_OQH - 1 WHERE PART_CODE = 'B' COMMIT;	BEGIN TRANSACTION UPDATE PRODUCT SET PROD_QOH = PROD_OQH + 1 WHERE PROD_CODE = 'AB' UPDATE PART SET PART_QOH = PART_OQH - 1 WHERE PART_CODE = 'A' OR PART_CODE = 'B' COMMIT;

THE END